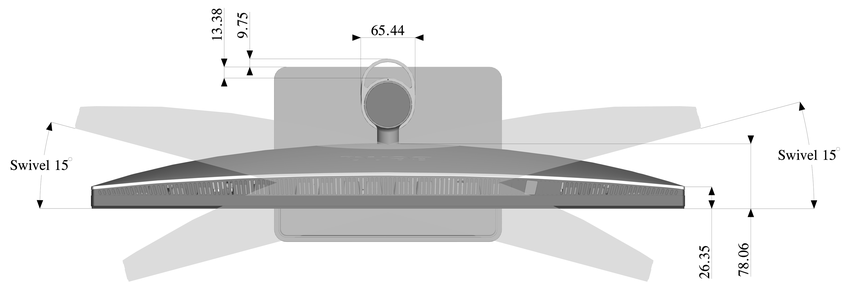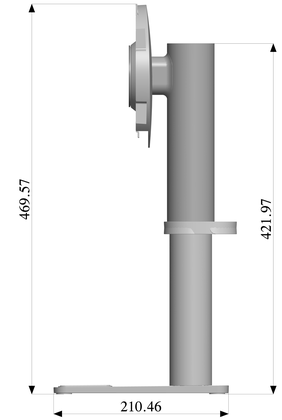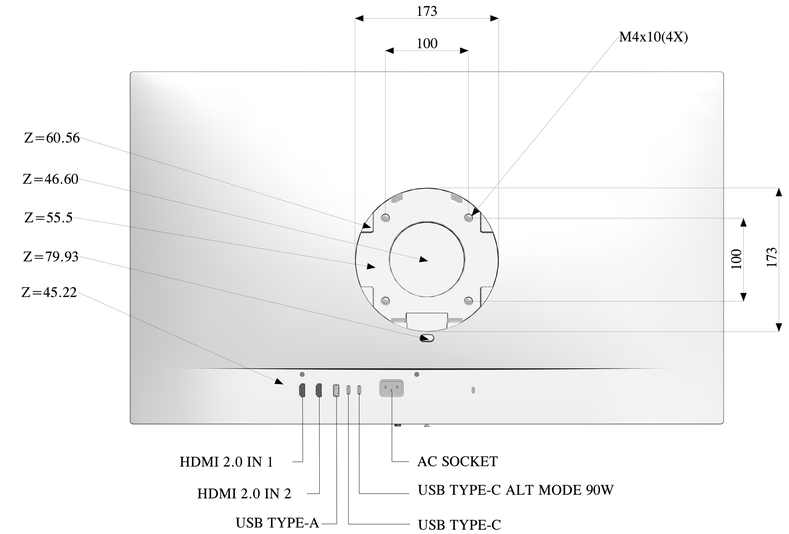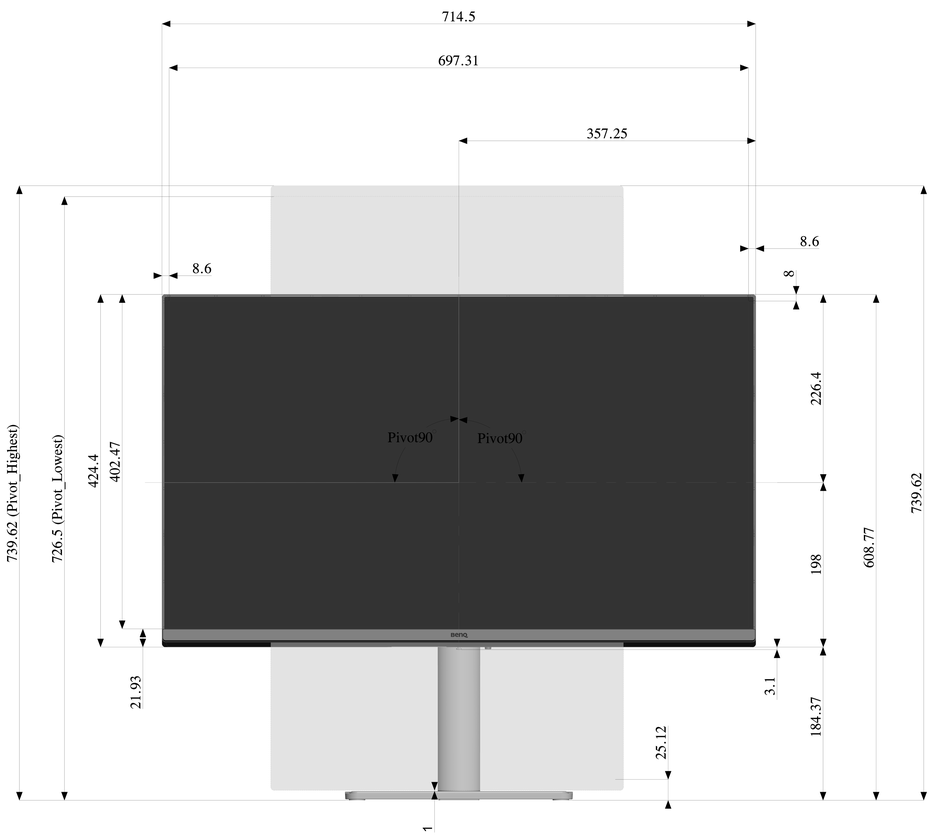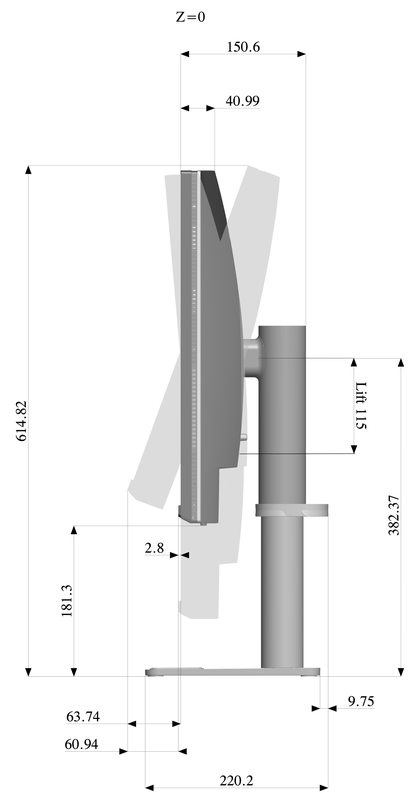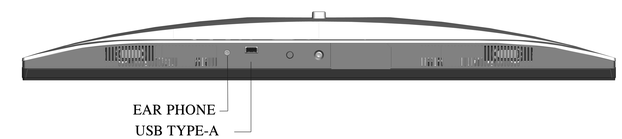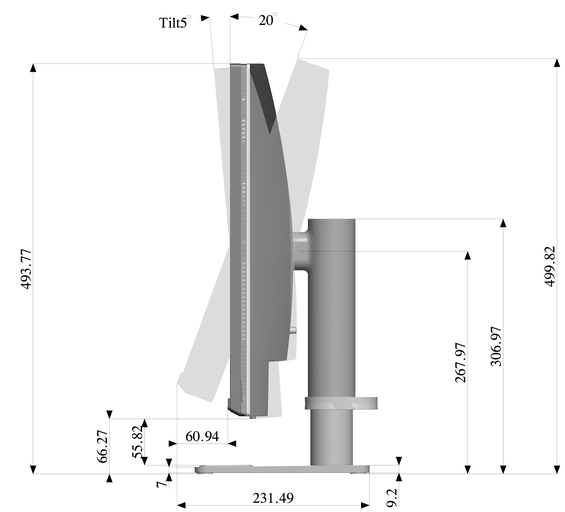BENQ MODEL NAME MA320U
Unit: mm
Dimension: Norminal
Drawing: Not to Scale